Crystal Units
Surface Mount Type CX5032SB

KYOCERA

5.0×3.2mm for Mobile Communications

RoHS Compliant

Features

- Reference frequency for telecommunication systems
- Ceramic package
- Reflow compatible

Applications

- Mobile Communications, Bluetooth®, Wireless LAN

* Bluetooth® Trademarks are owned by Bluetooth SIG Inc.

How to Order

CX5032SB 26000 □□ □ □ □ □□

① ② ③ ④ ⑤ ⑥ ⑦

① Series ② Frequency
③ Load Capacitance ④ Frequency Tolerance

H0	12 pF	F	±10×10⁻⁶

⑤ Operating Temp. Range ⑥ Frequency Temp. Stability

LJ	−30 to +85°C	±15×10⁻⁶

⑦ Individual Specification

Packaging (Tape & Reel 1000 pcs./ reel)

Specifications

Item	Symbol	Specification		Units	Remarks
Frequency Range	f_{nom}	9800 to 50000	50 to 80 (MHz)	kHz	
Overtone Order	OT	Fundamental	3rd. Overtone	—	
Load Capacitance	CL	12		pF	Please contact us for other Load Capacitance.
Frequency Tolerance	f_{tol}	±10		$\times 10^{-6}$	25°C±3°C
Motional Series Resistance	R1	Table 1		ohm	
Drive Level	DL	Table 2		μW	
Operating Temp. Range	T_{use}	−30 to +85		°C	
Storage Temp. Range	T_{stg}	−40 to +85		°C	
Frequency Temp. Characteristics	f_{tem}	±15		$\times 10^{-6}$	Freq. deviation from the value at 25°C

Please contact us for other specifications.

Table1 Motional Series Resistance

Frequency Range	Motional Series Resistance
9800≤f_{nom}<10000kHz	150Ω max.
10000≤f_{nom}<12000kHz	80Ω max.
12000≤f_{nom}<26000kHz	50Ω max.
26000≤f_{nom}≤50000kHz	40Ω max.
***50≤f_{nom}≤80 (MHz)**	80Ω max.

* 3rd Overtone

Table2 Level of Drive

Frequency Range	Level of Drive
9800≤f_{nom}≤50000kHz	10μW (100μW max.)
50≤f_{nom}≤80 (MHz)	

Dimensions

(Unit: mm)

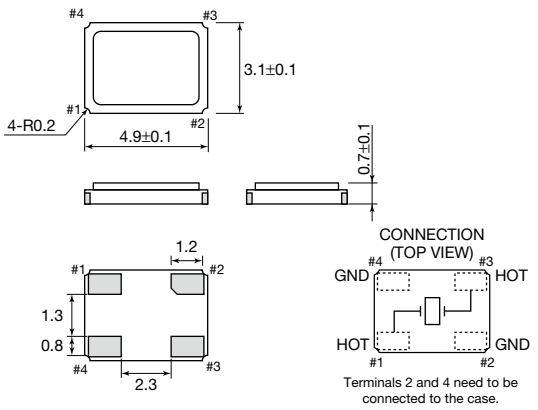

Recommended Land Pattern
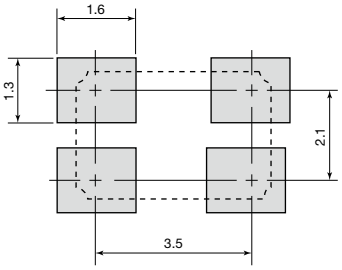
(Unit: mm)